MOVING HEAD

FORIS WASH 760

MANUAL

FAST PAN, TILT & ZOOM

IP65 LIGHTWEIGHT BUILD

POWERFUL 60W RGBL LEDS

LIGHT INC

www.light-inc.nl

TABLE OF CONTENTS

		PAGE
1.	SAFETY INFORMATION	3
2.	INSTALLATION	4
3.	SPECIFICATIONS	5
4.	OPERATION MENU	7
5.	RDM SUPPORT	9
6.	DMX CHANNEL SHEET - 21 CH	9
	DMX CHANNEL SHEET - 28 CH	13
	DMX CHANNEL SHEET - 65 CH	17
7.	SECURITY TIPS	20
8.	NOTES	20

THANK YOU FOR PURCHASING OUR PRODUCTS

Every unit has been thoroughly tested and has been shipped in perfect operating condition. Carefully check the outer and inner packaging for damage that may have occurred during shipping. If the carton appears to be damaged, carefully inspect your fixture for any damage and be sure all accessories necessary to operate the unit have arrived intact. In case damage has been found or parts are missing, please contact the distributor or your dealer for further instructions. Do not return this unit to your dealer without first contacting them.

1. SAFETY INFORMATION

	Before operating this unit, please carefully read this manual and keep for usage in the future. It is necessary to respect the following rules.
	Disposal of the device after its life cycle can damage the environment. Take it to a recycling company or return it to the authorised dealer.
	The products referred to in this manual conform to the guidelines of the European Community and are therefore marked with the CE logo.
	Keep this device away from children and unauthorised users. The dealer is not liable for damage as a result of ignoring the information in this manual and incorrect operation.
	Before operating this unit, please make sure the housing is in good condition and ensure pan and tilt can rotate in full range.
0.5 m	Ensure that a minimum distance of 0.5 m is maintained between the fixture and any flammable material
	The device can only function with 100-240v voltage, 50 / 60Hz power. Do not connect to any other power supply. Disconnect the device from the power supply before opening it or before maintenance.
IP65	For outdoor events.
	Never look directly into the projecting lens when the fixture is switched on. The light can cause epileptic seizures in light-sensitive people or people with epilepsy. Extreme caution and compliance with these safety instructions are required, especially with beam effects.
	Do not place or install the device on a surface that is exposed to vibration or any movement.
-15°C +45°C	The device should operate in temperature range -15 °C and + 45 °C. Do not use the device if the temperature exceeds this range.
	The lens shield must be replaced if it is broken. Never use the device if the shield is not fully closed.
	Safety I class device must be earthed.
	When the fixture is mounted overhead, the safety rope must be attached to the correct mounting location on the bottom of the device.
	Please note that damage caused by manual changes to the device is not covered by the warranty.
	If possible, recycle all packaging material.

2. INSTALLATION

Please keep the equipment away from flammable objects. Maintain a minimum distance of 0.5 meters from any flammable surfaces.

Warning: Use two clamps to secure the equipment to the bottom of the lamp base as instructed. Ensure that the installation location is safe, suitable, and reliable.

The installation point must be able to support at least 10 times the weight of the fixture. Test the mounting surface carefully to confirm that it is stable and free from deformation.

A secondary safety protection, such as a proper safety cable always be installed. This serves to prevent the fixture or its components from falling or becoming detached.

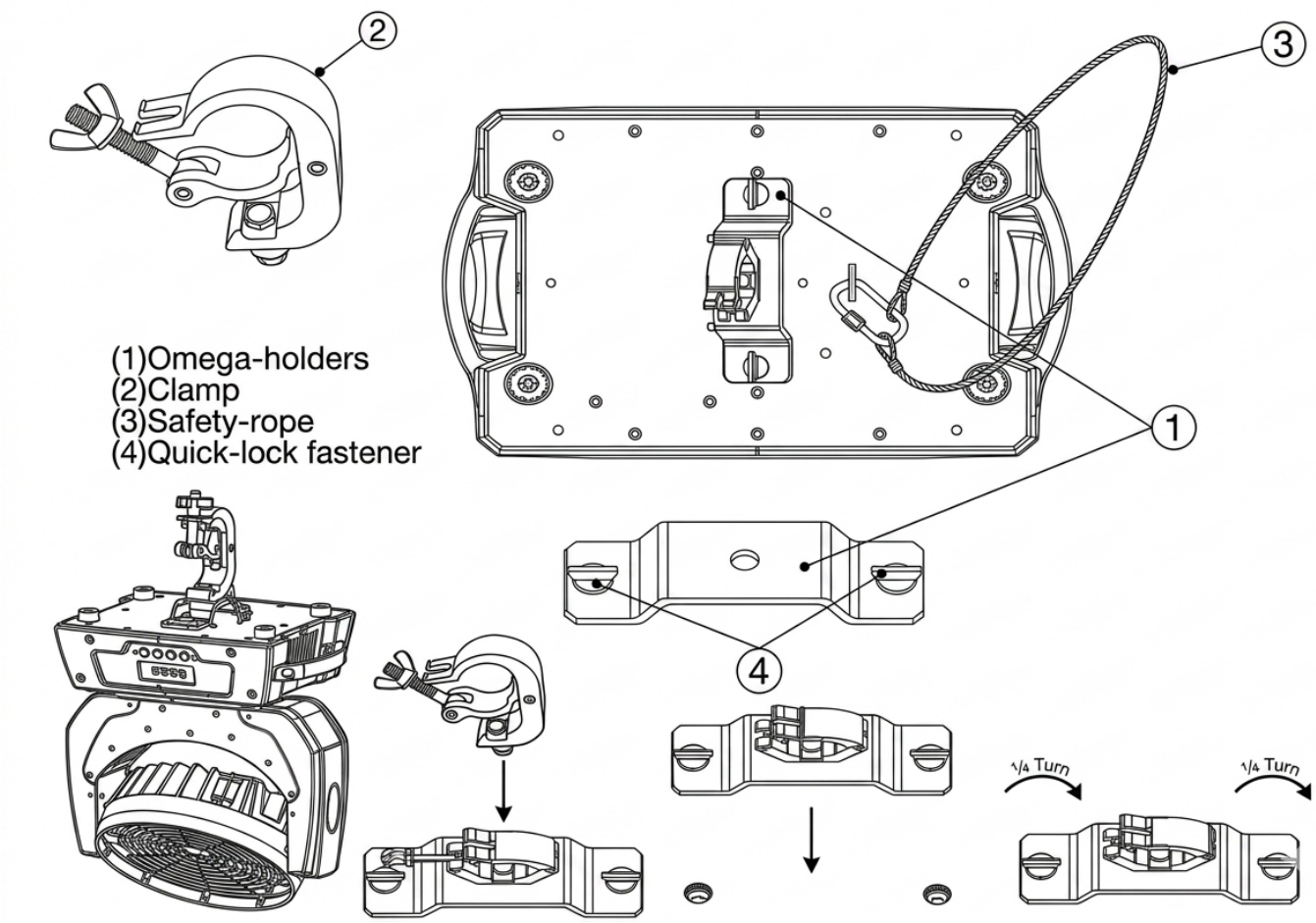

Main machine connection

Please check the supported power equipment.
Please put the plug of power source wire connect with the main power source .

Wire (EU)	Wire (Amerca)	Direction of wire	General marks
Brown	Black	Live	L
Light blue	White	Neutral	N
Yellow / Green	Green	Earth	⏚

3. SPECIFICATIONS

Input:	AC 90–260 V, 50/60 Hz
Power consumption:	470 W
Light source:	7 × 60 W RGBL LEDs
LED ring:	72 × 0.12 W RGB 3-in-1 LEDs
Life time:	20000 hrs
Zoom range:	3.4° – 46°
CRI:	82
Colour temperature:	2,700 – 8,000 K
Operating ambient temperature:	-10 °C to 40 °C
Control mode:	Auto, DMX512, RDM
DMX channels:	21 / 28 / 65 ch
Optics:	High-efficiency light-concentrating guide column with integrated high-transmittance acrylic lens
Colour mixing:	Infinite colour mixing
LED Ring Effects:	Decorative RGB LED ring capable of producing various flowing light effects
Dimmer:	0 – 100% smooth dimming
Strobe:	1 – 20 Hz, variable speed
Pan movement:	540°, 16-bit resolution
Tilt movement:	270°, 16-bit resolution
Display:	LCD display with 5 buttons
Cooling:	Low-noise waterproof cooling via integrated die-cast aluminium heat sink
IP rating:	IP65
Signal Data:	5-pin XLR DMX in/out
Power connector:	TRUE1 Powercon in/out
Product size:	388 × 256 × 491 mm
Net weight:	15.2 kg

Dimensions

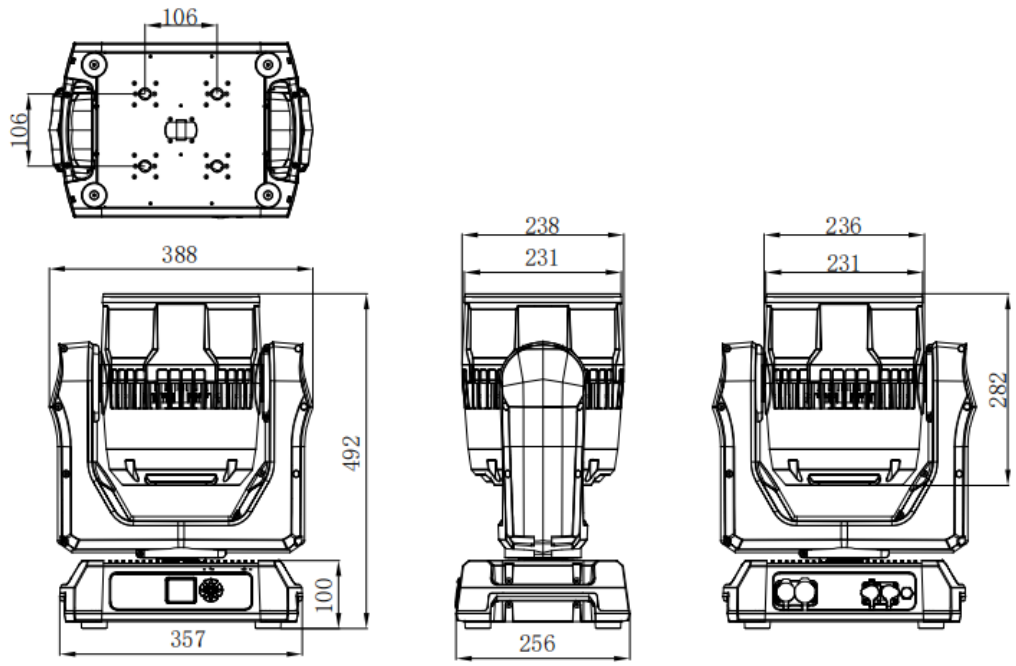

Illuminance

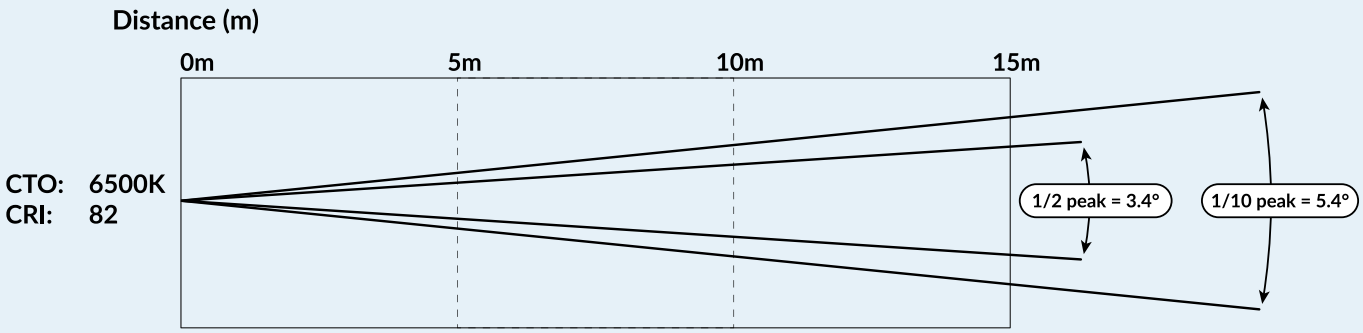

	0m	5m	10m	15m
3.4° Diameter (m)		0.28	0.57	1.10
5.4° Diameter (m)		0.40	0.84	1.30
Full brightness (Lux)		22003	8470	3650
Red (Lux)		3800	972	416
Green (Lux)		9640	2400	1077
Blue (Lux)		18230	4540	2000
Lime (Lux)		9240	2300	1053

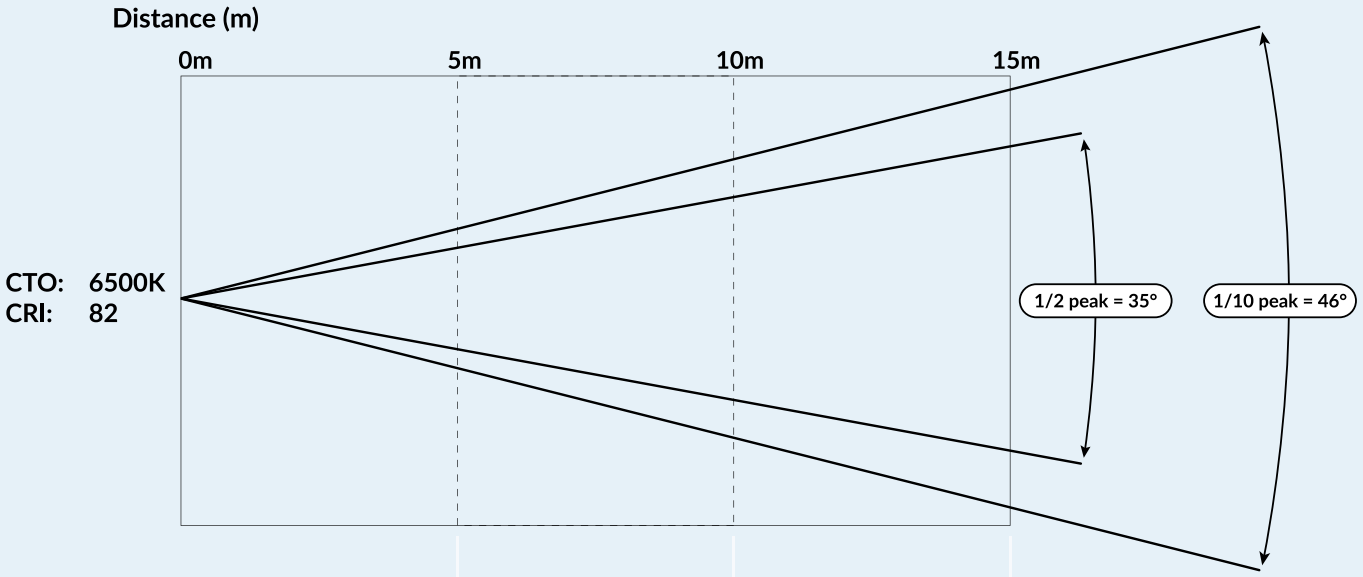

	0m	5m	10m	15m
35° Diameter (m)		3.02	5.30	7.40
46° Diameter (m)		4.45	5.12	7.20
Full brightness (Lux)		962	246	164
Red (Lux)		98	28	11
Green (Lux)		267	66	30
Blue (Lux)		514	133	56
Lime (Lux)		252	64	30

4. OPERATION MENU

Menu	Function	Value	
ADDR	Channel	001-512	
	Prev	Previous device	
	Next	Next device	
Mode	Mode select	Auto / DMX	
	M/S mode	Master / Slave	
	Dime mode	Linear / Log / Index / S-curve	
	Fan mode	High / Low / Auto	
	Dim Speed	Slow / Mid / Fast / VFast	
	Dim Frequency	1kHz / 2kHz / 3kHz / 5kHz---25Khz	
Display	Language	English	
	Screen Rot	Auto / Close / Open	
	Screen Saver	On / Off	
	DMX_Indicate	Mode 1-2	Mode 1. No DMX input led is OFF
			Mode 2. No DMX input led is ON
	Screen_Light	01-10	Screen Brightness
Scene	1. Pan	000-255	
	2. Pan fine	000-255	
	3. Tilt	000-255	
	4. Tilt fine	000-255	
	5. XT speed	000-255	
	6. Dimmer	000-255	
	7. Dim fine	000-255	
	8. Strobe	000-255	
	9. Red	000-255	
	10. Red fine	000-255	
	11. Green	000-255	
	12. Green fine	000-255	
	13. Blue	000-255	
	14. Blue fine	000-255	
	15. Lime	000-255	
	16. Lime fine	000-255	
	17. Zoom	000-255	
	18. Macro	000-255	
	19. Mac speed	000-255	
	20. Mac delay	000-255	
	21. Ring R	000-255	
	22. Ring G	000-255	
	23. Ring B	000-255	
	24. Ring eft	000-255	
	25. Ring speed	000-255	
	26. Ring dim	000-255	
	27. Ring shutter	000-255	
	28. Reset	000-255	
	29. CTO	000-255	
	30. Ring R1	000-255	

Menu	Function	Value
Scene	31. Ring G1	000-255
	32. Ring B1	000-255
	------	------
	63. Ring R12	000-255
	64. Ring G12	000-255
	65. Ring B12	000-255
Setup	Channel	21ch / 28ch / 65ch
	Pan Invert	On / Off
	Tilt Invert	On / Off
	P/T Rectify	On / Off
	Data Hold	On / Off
	Reset	On / Off
	Factory reset	On / Off
State	Total time	xxxxxx:xx
	Light_time	xxxxxx:xx
	Version	At.7.61
	Error-logging	
	FixTrue_Status	
	Stepper info	

5. RDM SUPPORT

The fixture supports RDM (Remote Device Management). The following RDM functions are supported:

Function	PID
Supported Parameters	0x0050
Parameter Description	0x0051
Device Info	0x0060
Device Model Description	0x0080
Manufacturer Label	0x0081
Device Label	0x0082
Software Version Label	0x00C0
DMX Personality	0x00E0
DMX Personality Description	0x00E1
DMX Start Address	0x00F0
Pan Invert	0x0600
Tilt Invert	0x0601
Identify Device	0x1000

6. DMX CHANNEL SHEET - 21 CH

21 CH	Function	DMX Value	Description
1	Pan	0-255	Pan movement range 540°
2	Tilt	0-255	Tilt movement range 270°
3	Pan/Tilt speed	0-255	Pan/Tilt speed from fast to slow
4	Red	0-255	Linear dimmer 0-100% Red
5	Green	0-255	Linear dimmer 0-100% Green
6	Blue	0-255	Linear dimmer 0-100% Blue
7	Lime	0-255	Linear dimmer 0-100% Lime
8	Dimmer	0-255	Linear dimmer 0-100%
9	Strobe	0-8	Strobe closed
		9-88	Strobe effect 1 from slow to fast
		89-168	Strobe effect 2 from slow to fast
		169-240	Random strobe from slow to fast
		241-255	Strobe open
10	Macro (color presets)	0-15	No function
		16-20	Color 1 Red
		21-25	Color 2 Magenta
		26-30	Color 3 Red 2
		31-40	No function
		41-45	Color 4 Pink
		46-50	Color 5 Red 3
		51-55	No function

21 CH	Function	DMX Value	Description
10	Macro (color presets)	56-60	Color 6 Salmon
		61-65	Color 7 Red 4
		66-70	Color 8 Light pink
		71-75	No function
		76-80	Color 9 Orange
		81-85	Color 10 Yellow
		86-105	No function
		106-110	Color 11 Green
		111-115	No function
		116-120	Color 12 Cyan
		121-135	No function
		136-140	Color 13 Light Cyan
		141-145	Color 14 Light blue
		146-150	Color 15 Sea green
		151-155	No function
		156-160	Color 16 Lavender
		161-165	Color 17 Medium blue
		166-180	No function
		181-185	Color 18 Purple
		186-195	No function
		196-200	Color 19 Pink 2
		201-205	Color 20 Pink 3
		206-215	No function
		216-220	Color 21 Flame red
		221-225	Color 22 Pink 4
		226-235	No function
		236-240	Color 23 Pink 6
		241-245	Color 24 Flame red 2
		246-255	No function
11	CTO	0-11	No function
		12-24	2700K
		25-37	3000K
		38-50	3300K
		51-63	3600K
		64-76	3900K
		77-89	4200K
		90-102	4500K
		103-115	4800K
		116-128	5100K
		129-141	5400K
		142-154	5700K
		155-167	6000K
		168-180	6300K
		181-193	6600K
		194-206	6900K

21 CH	Function	DMX Value	Description
11	CTO	207-219	7200K
		220-232	7500K
		233-245	7800K
		246-255	8000K
12	Zoom	0-255	From large to small
13	Ring red	0-255	Ring red 0-100%
14	Ring green	0-255	Ring green 0-100%
15	Ring blue	0-255	Ring blue 0-100%
16	Ring fixed color preset	0-15	No function
		16-20	Color 1 Red 1
		21-25	Color 2 Magenta
		26-30	Color 3 Red 2
		31-40	No function
		41-45	Color 4 Pink 1
		46-50	Color 5 Rose pink
		51-55	No function
		56-60	Color 6 Light pink
		61-65	Color 7 Red 3
		66-70	Color 8 Magenta 2
		71-75	No function
		76-80	Color 9 Warm white
		81-85	Color 10 Yellow
		86-105	No function
		106-110	Color 11 Green
		111-115	No function
		116-120	Color 12 Cyan
		121-135	No function
		136-140	Color 13 Sea green
		141-145	Color 14 Light blue
		146-150	Color 15 Medium blue
		151-155	No function
		156-160	Color 16 Cold white
		161-165	Color 17 Light cyan
		166-180	No function
		181-185	Color 18 Purple
		186-195	No function
		196-200	Color 19 Pale rose
		201-205	Color 20 Dark magenta
		206-215	No function
		216-220	Color 21 Flame red
		221-225	Color 22 Light pink 2
		226-235	No function
		236-240	Color 23 Rose 2
		241-245	Color 24 Red 4
		246-255	No function

21 CH	Function	DMX Value	Description
17	Ring color effect	0-10	Closed
		11-20	Red
		21-30	Green
		31-40	Blue
		41-50	Orange
		51-60	Cyan
		61-70	Yellow
		71-80	Purple
		81-90	White
		91-100	Macro 1
		101-110	Macro 2
		111-120	Macro 3
		121-130	Macro 4
		131-140	Macro 5
		141-150	Macro 6
		151-160	Macro 7
		161-170	Macro 8
		171-180	Macro 9
		181-190	Macro 10
		191-200	Macro 11
		201-210	Macro 12
		211-220	Macro 13
		221-255	Macro 14
18	Ring chases	0-255	Speed from slow to fast
19	Ring dimmer	0-255	Ring dimmer 0-100%
20	Ring strobe	0-255	Strobe 0-100%
21	Control / PWM / Reset	0-3	Default
		4-7	1kHz
		8-17	2kHz
		18-27	3kHz
		28-37	5kHz
		38-47	7kHz
		48-57	9kHz
		58-67	11kHz
		68-77	13kHz
		78-87	15kHz
		88-97	17kHz
		98-107	19kHz
		108-117	21kHz
		118-127	25kHz
		128-129	Blank
		130-255	Reset

6. DMX CHANNEL SHEET - 28 CH

28 CH	Function	DMX Value	Description
1	Pan	0-255	Pan movement range 540°
2	Pan fine	0-255	Pan fine 16 bit
3	Tilt	0-255	Tilt movement range 270°
4	Tilt fine	0-255	Tilt fine 16 bit
5	Pan/Tilt speed	0-255	Pan/Tilt speed from fast to slow
6	Red	0-255	Red Linear dimmer 0-100%
7	Red fine	0-255	Red fine 16 bit
8	Green	0-255	Green Linear dimmer 0-100%
9	Green fine	0-255	Green fine 16 bit
10	Blue	0-255	Blue Linear dimmer 0-100%
11	Blue fine	0-255	Blue fine 16 bit
12	Lime	0-255	Lime Linear dimmer 0-100%
13	Lime fine	0-255	Lime fine 16 bit
14	Dimmer	0-255	0-100% linear dimmer
15	Dimmer fine	0-255	Dimmer fine 16 bit
16	Strobe	0-8	Strobe closed
		9-88	Strobe effect 1 from slow to fast
		89-168	Strobe effect 2 from slow to fast
		169-240	Random strobe from slow to fast
		241-255	Strobe open
17	Macro (color presets)	0-15	No function
		16-20	Color 1 Red
		21-25	Color 2 Magenta
		26-30	Color 3 Red 2
		31-40	No function
		41-45	Color 4 Pink
		46-50	Color 5 Red 3
		51-55	No function
		56-60	Color 6 Salmon
		61-65	Color 7 Red 4
		66-70	Color 8 Light pink
		71-75	No function
		76-80	Color 9 Orange
		81-85	Color 10 Yellow
		86-105	No function
		106-110	Color 11 Green
		111-115	No function
		116-120	Color 12 Cyan
		121-135	No function
		136-140	Color 13 Light Cyan
		141-145	Color 14 Light blue
		146-150	Color 15 Sea green
		151-155	No function
		156-160	Color 16 Lavender

28 CH	Function	DMX Value	Description
17	Macro (color presets)	161-165	Color 17 Medium blue
		166-180	No function
		181-185	Color 18 Purple
		186-195	No function
		196-200	Color 19 Pink 2
		201-205	Color 20 Pink 3
		206-215	No function
		216-220	Color 21 Flame red
		221-225	Color 22 Pink 4
		226-235	No function
		236-240	Color 23 Pink 6
		241-245	Color 24 Flame red 2
		246-255	No function
18	CTO	0-11	No function
		12-24	2700K
		25-37	3000K
		38-50	3300K
		51-63	3600K
		64-76	3900K
		77-89	4200K
		90-102	4500K
		103-115	4800K
		116-128	5100K
		129-141	5400K
		142-154	5700K
		155-167	6000K
		168-180	6300K
		181-193	6600K
		194-206	6900K
		207-219	7200K
		220-232	7500K
		233-245	7800K
		246-255	8000K
19	Zoom	0-255	From large to small
20	Ring red	0-255	Ring red 0-100%
21	Ring green	0-255	Ring green 0-100%
22	Ring blue	0-255	Ring blue 0-100%
23	Ring fixed color preset	0-15	No function
		16-20	Color 1 Red 1
		21-25	Color 2 Magenta

28 CH	Function	DMX Value	Description
23	Ring fixed color preset	26-30	Color 3 Red 2
		31-40	No function
		41-45	Color 4 Pink 1
		46-50	Color 5 Rose pink
		51-55	No function
		56-60	Color 6 Light pink
		61-65	Color 7 Red 3
		66-70	Color 8 Magenta 2
		71-75	No function
		76-80	Color 9 Warm white
		81-85	Color 10 Yellow
		86-105	No function
		106-110	Color 11 Green
		111-115	No function
		116-120	Color 12 Cyan
		121-135	No function
		136-140	Color 13 Sea green
		141-145	Color 14 Light blue
		146-150	Color 15 Medium blue
		151-155	No function
		156-160	Color 16 Cold white
		161-165	Color 17 Light cyan
		166-180	No function
		181-185	Color 18 Purple
		186-195	No function
		196-200	Color 19 Pale rose
		201-205	Color 20 Dark magenta
		206-215	No function
		216-220	Color 21 Flame red
		221-225	Color 22 Light pink 2
		226-235	No function
		236-240	Color 23 Rose 2
		241-245	Color 24 Red 4
		246-255	No function
24	Ring color effect	0-10	Closed
		11-20	Red
		21-30	Green
		31-40	Blue
		41-50	Orange
		51-60	Cyan

28 CH	Function	DMX Value	Description
24	Ring color effect	61-70	Yellow
		71-80	Purple
		81-90	White
		91-100	Macro 1
		101-110	Macro 2
		111-120	Macro 3
		121-130	Macro 4
		131-140	Macro 5
		141-150	Macro 6
		151-160	Macro 7
		161-170	Macro 8
		171-180	Macro 9
		181-190	Macro 10
		191-200	Macro 11
		201-210	Macro 12
		211-220	Macro 13
		221-255	Macro 14
25	Ring chases	0-255	Speed from slow to fast
26	Ring dimmer	0-255	Ring dimmer 0-100%
27	Ring strobe	0-255	Strobe 0-100%
28	Control / PWM / Reset	0-3	Default
		4-7	1kHz
		8-17	2kHz
		18-27	3kHz
		28-37	5kHz
		38-47	7kHz
		48-57	9kHz
		58-67	11kHz
		68-77	13kHz
		78-87	15kHz
		88-97	17kHz
		98-107	19kHz
		108-117	21kHz
		118-127	25kHz
		128-129	Blank
		130-255	Reset

6. DMX CHANNEL SHEET - 65 CH

65 CH	Function	DMX Value	Description
1	Pan	0-255	Pan movement range 540°
2	Pan fine	0-255	Pan fine 16 bit
3	Tilt	0-255	Tilt movement range 270°
4	Tilt fine	0-255	Tilt fine 16 bit
5	Pan/Tilt speed	0-255	Pan/Tilt speed from fast to slow
6	Dimmer	0-255	0-100% linear dimmer
7	Dimmer fine	0-255	Dimmer fine 16 bit
8	Strobe	0-8	Strobe closed
		9-88	Strobe effect 1 from slow to fast
		89-168	Strobe effect 2 from slow to fast
		169-240	Random strobe from slow to fast
		241-255	Strobe open
9	Red	0-255	Red Linear dimmer 0-100%
10	Red fine	0-255	Red fine 16 bit
11	Green	0-255	Green Linear dimmer 0-100%
12	Green fine	0-255	Green fine 16 bit
13	Blue	0-255	Blue Linear dimmer 0-100%
14	Blue fine	0-255	Blue fine 16 bit
15	Lime	0-255	Lime Linear dimmer 0-100%
16	Lime fine	0-255	Lime fine 16 bit
17	Zoom	0-255	From large to small
18	Macro (color presets)	0-10	Closed
		11-20	Red
		21-30	Green
		31-40	Blue
		41-50	Orange
		51-60	Cyan
		61-70	Yellow
		71-80	Purple
		81-90	White
		91-100	Macro 1
		101-110	Macro 2
		111-120	Macro 3
		121-140	Macro 4
		141-160	Macro 5
		161-180	Macro 6
		181-200	Macro 7
		201-220	Macro 8
		221-255	Macro 9
19	Macro speed	0-255	Speed from slow to fast

65 CH	Function	DMX Value	Description
20	Macro delay	0-255	Delay from fast to slow
21	Ring red	0-255	Ring red 0-100%
22	Ring green	0-255	Ring green 0-100%
23	Ring blue	0-255	Ring blue 0-100%
24	Ring color effect	0-10	Closed
		11-20	Red
		21-30	Green
		31-40	Blue
		41-50	Orange
		51-60	Cyan
		61-70	Yellow
		71-80	Purple
		81-90	White
		91-100	Macro 1
		101-110	Macro 2
		111-120	Macro 3
		121-130	Macro 4
		131-140	Macro 5
		141-150	Macro 6
		151-160	Macro 7
		161-170	Macro 8
		171-180	Macro 9
		181-190	Macro 10
		191-200	Macro 11
		201-210	Macro 12
		211-220	Macro 13
		221-255	Macro 14
25	Ring chases	0-255	Speed from slow to fast
26	Ring dimmer	0-255	Ring dimmer 0-100%
27	Ring strobe	0-255	Strobe 0-100%
28	PWM/Reset	0-3	Default
		4-7	1kHz
		8-17	2kHz
		18-27	3kHz
		28-37	5kHz
		38-47	7kHz
		48-57	9kHz
		58-67	11kHz
		68-77	13kHz
		78-87	15kHz

65 CH	Function	DMX Value	Description
28	PWM/Reset	88-97	17kHz
		98-107	19kHz
		108-117	21kHz
		118-127	25kHz
		128-129	Blank
		130-255	Reset
29	CTO	0-11	No function
		12-24	2700K
		25-37	3000K
		38-50	3300K
		51-63	3600K
		64-76	3900K
		77-89	4200K
		90-102	4500K
		103-115	4800K
		116-128	5100K
		129-141	5400K
		142-154	5700K
		155-167	6000K
		168-180	6300K
		181-193	6600K
		194-206	6900K
		207-219	7200K
		220-232	7500K
		233-245	7800K
		246-255	8000K
30	Red 1	0-255	Red 1 0-100%
31	Green 1	0-255	Green 1 0-100%
32	Blue 1	0-255	Blue 1 0-100%
33	Red 2	0-255	Red 2 0-100%
34	Green 2	0-255	Green 2 0-100%
35	Blue 2	0-255	Blue 2 0-100%
	-------	-------	
60	Red 11	0-255	Red 11 0-100%
61	Green 11	0-255	Green 11 0-100%
62	Blue 11	0-255	Blue 11 0-100%
63	Red 12	0-255	Red 12 0-100%
64	Green 12	0-255	Green 12 0-100%
65	Blue 12	0-255	Blue 12 0-100%

7. SECURITY TIPS

WARNING!!! To reduce the risk of fire, electric shock, or injury to persons, follow these important safety instructions:

- Non-professionals should not attempt to disassemble the fixture or any of its internal accessories.
- Rated voltage range: AC110V–120V / 60Hz or AC200V–240V / 50Hz (to be selected accordingly).
- Do not aim the fixture's beam directly at flammable materials. A minimum distance of 1 meter must be maintained between the fixture and any flammable objects.
- Operating ambient temperature: -10 °C to 40 °C. Maximum surface temperature of the fixture: 60 °C.
- Keep the fixture away from liquids and humid environments.
- Before use, ensure proper grounding. Do not install, charge, or remove any parts while the fixture is powered.
- When installing the fixture, secure it with screws, use an additional safety cable, and inspect it regularly.
- Continuous operation should not exceed 10 hours.
- Stop using the fixture immediately if any unusual conditions occur during operation.
- Rotating parts, external accessories, and attached components should be inspected regularly. If looseness or instability is detected, reinforce them promptly to prevent accidents.
- The fixture uses strong airflow for cooling, which causes dust accumulation. Clean it weekly, especially the cooling air inlets, to prevent blockages that could reduce performance.

8. NOTES

ALL SPECIFICATIONS ARE SUBJECT TO CHANGE WITHOUT NOTICE

BSL B.V.
SPAARPOT 19 | 5667 KV GELDROP | THE NETHERLANDS | +31 (0)40 750 24 95

WWW.BSL-LIGHTING.COM | WWW.LIGHT-INC.EU